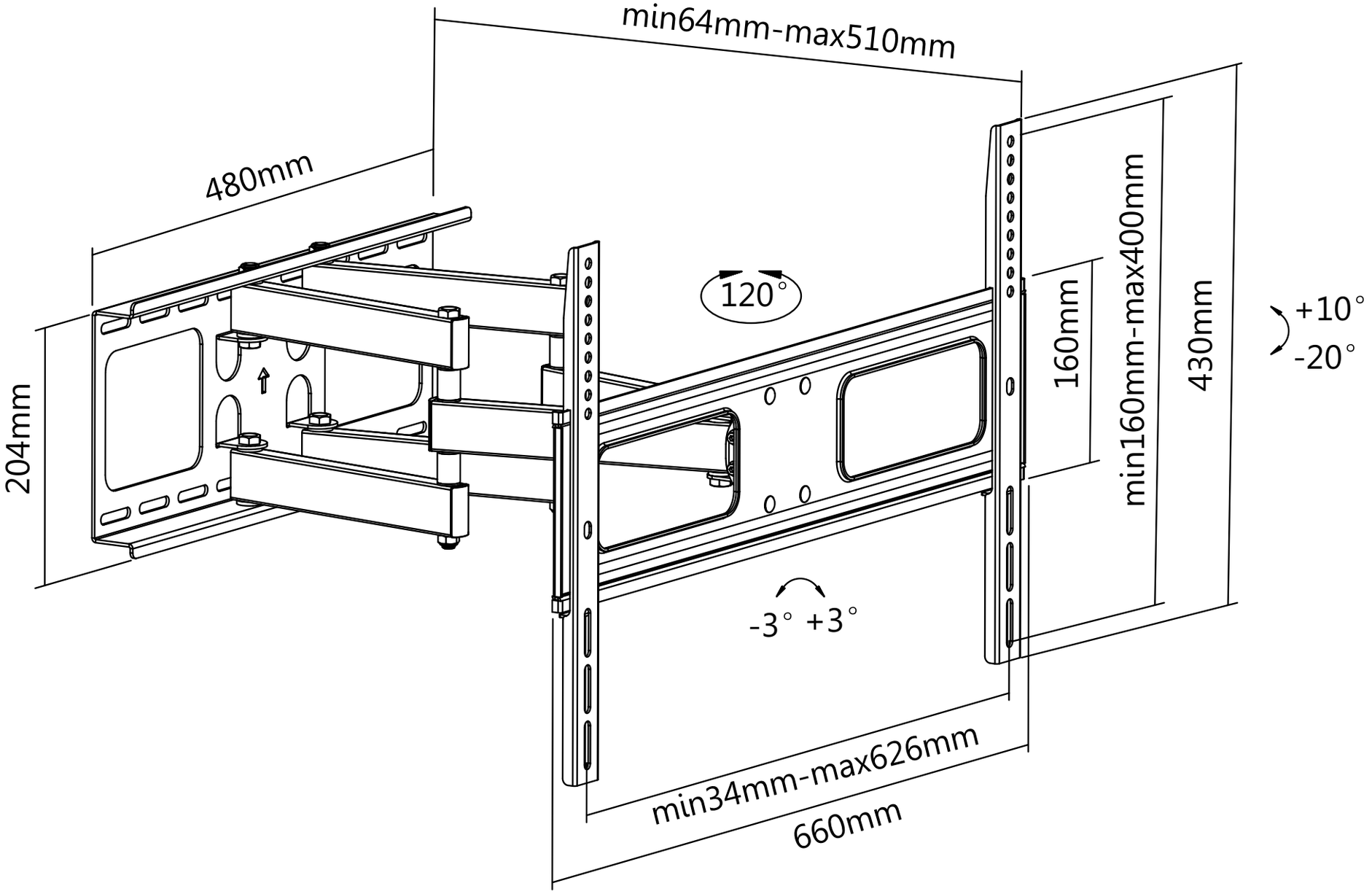
min64mm-max510mm
480mm
204mm
120°
160mm
min160mm-max400mm
430mm
+10°
-20°
-3° +3°
min34mm-max626mm
660mm